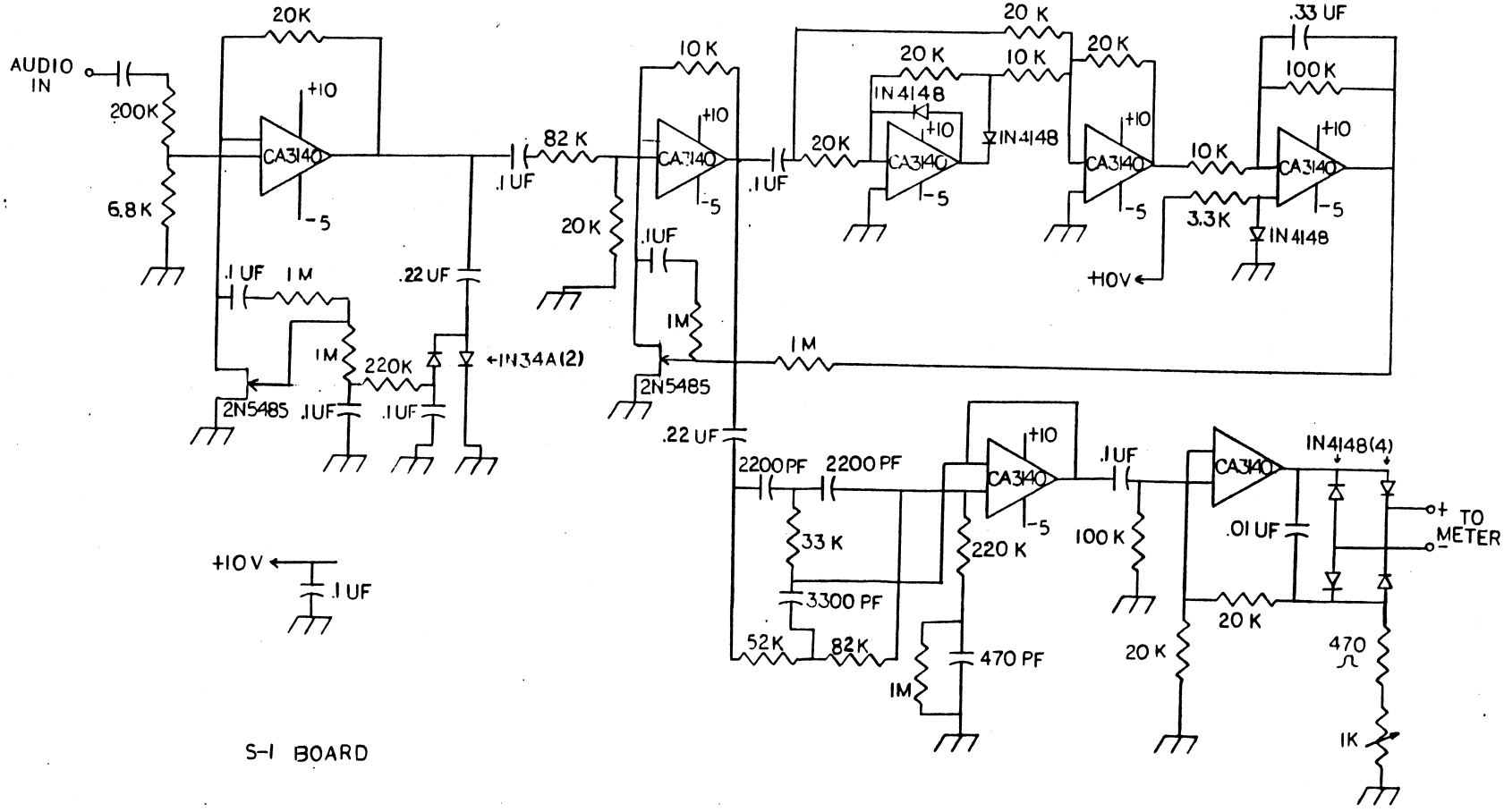
AUDIO IN
200K
6.8K
20K
CA3140
+10
-5
.1 UF
1 M
1M
220K
.1UF
.1UF
2N5485
.22 UF
←IN34A(2)
82 K
.1 UF
20 K
10 K
.1UF
1M
2N5485
.22 UF
20 K
20 K
10 K
IN4148
IN4148
20 K
10 K
3.3K
IN4148
.33 UF
100 K
+10V
2200 PF
2200 PF
33 K
3300 PF
52K
82K
220 K
470 PF
1M
.1UF
100 K
20 K
20 K
.01 UF
IN4148(4)
470
1K
+ TO METER -
+10 V
.1 UF

S-1 BOARD