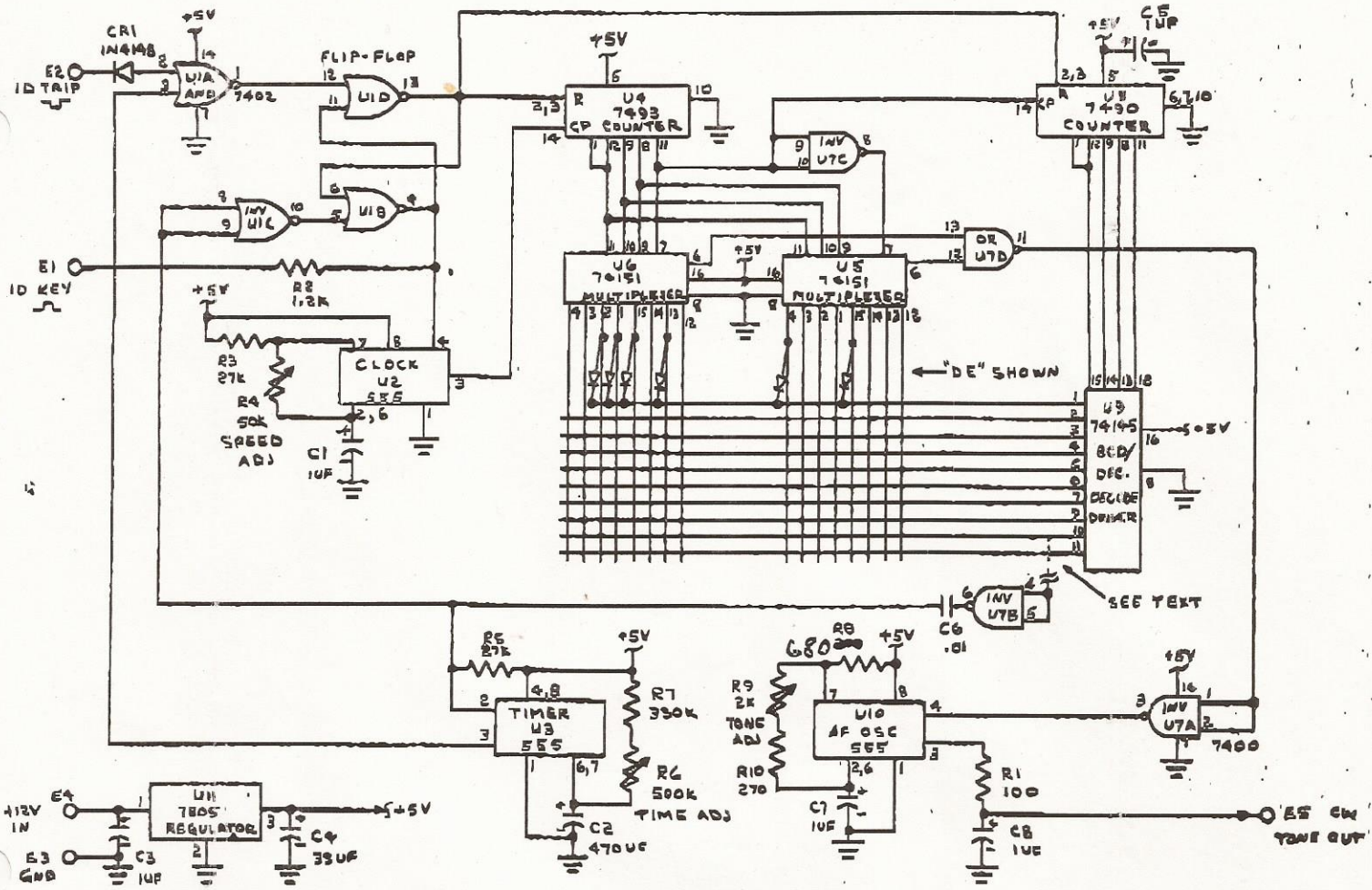

CR1
1N4148
+5V
E2
ID TRIP
U1A
AND
7402
FLIP-FLOP
U1D
U4
7493
CP COUNTER
U8
7490
COUNTER
C5
1UF
INV
U7C
INV
U1C
U1B
E1
ID KEY
R2
1.2K
R3
27K
R4
50K
SPEED
ADJ
CLOCK
U2
555
C1
1UF
U6
74151
MULTIPLEXER
U5
74151
MULTIPLEXER
OR
U7D
"DE" SHOWN
U9
74145
BCD/
DEC.
DECODE
DRIVER
SEE TEXT
INV
U7B
C6
.01
R5
27K
TIMER
U3
555
R7
330K
R6
500K
TIME ADJ
C2
470UF
R8
680
R9
2K
TONE
ADJ
R10
270
U10
AF OSC
555
C7
1UF
R1
100
C8
1UF
INV
U7A
7400
E5 CW
TONE OUT
+12V
IN
E4
E3
GND
U11
7805
REGULATOR
C3
1UF
C4
33UF

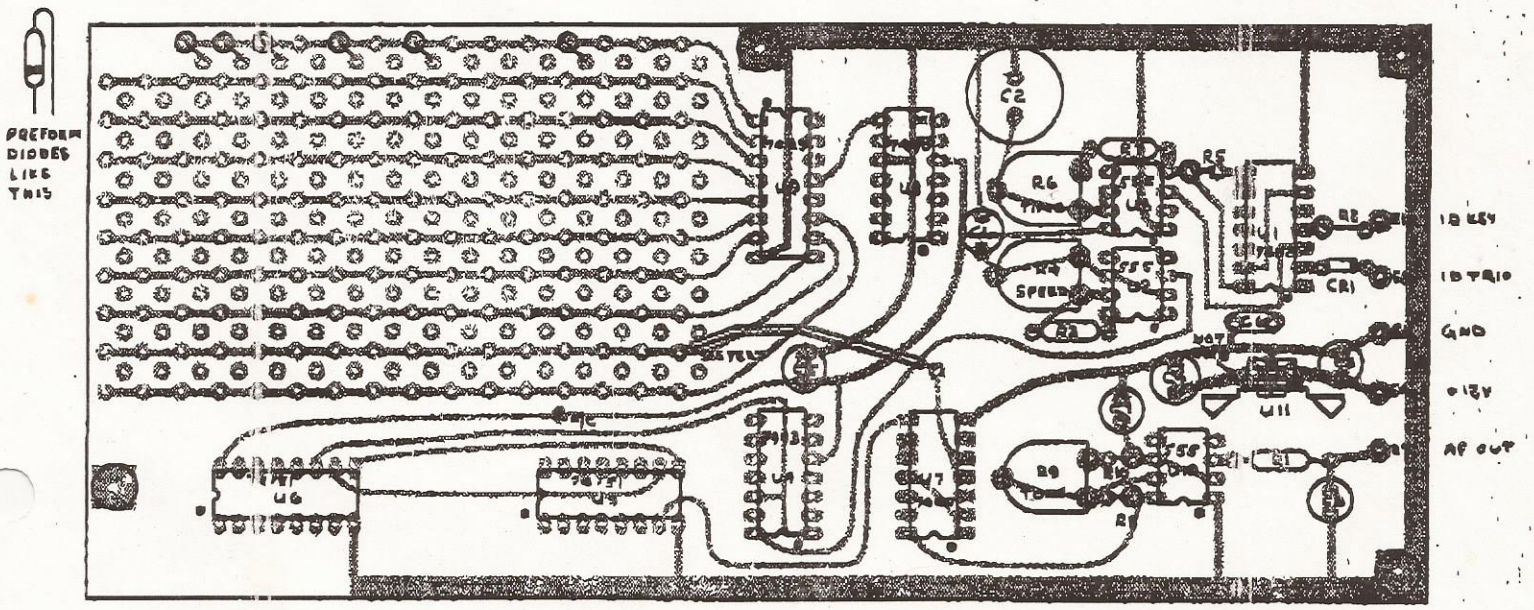

PREFORM
DIODES
LIKE
THIS
C2
R6
R5
R4
SPEED
R2
CR1
ID KEY
ID TRIO
GND
+12V
AF OUT
U11
U6
U7
R9