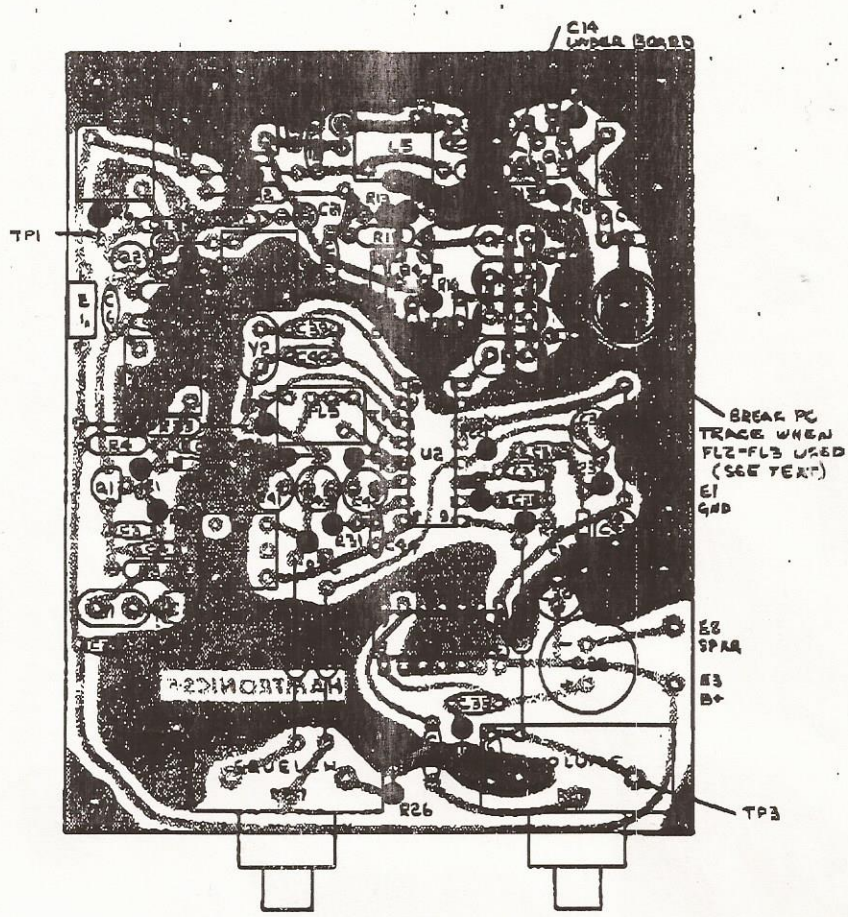
C14
UNDER BOARD
TP1
BREAK PC
TRACE WHEN
FL2-FL3 USED
(SEE TEXT)
E1
GND
E2
SPKR
E3
B+
TP3
SQUELCH
VOLUME
R26

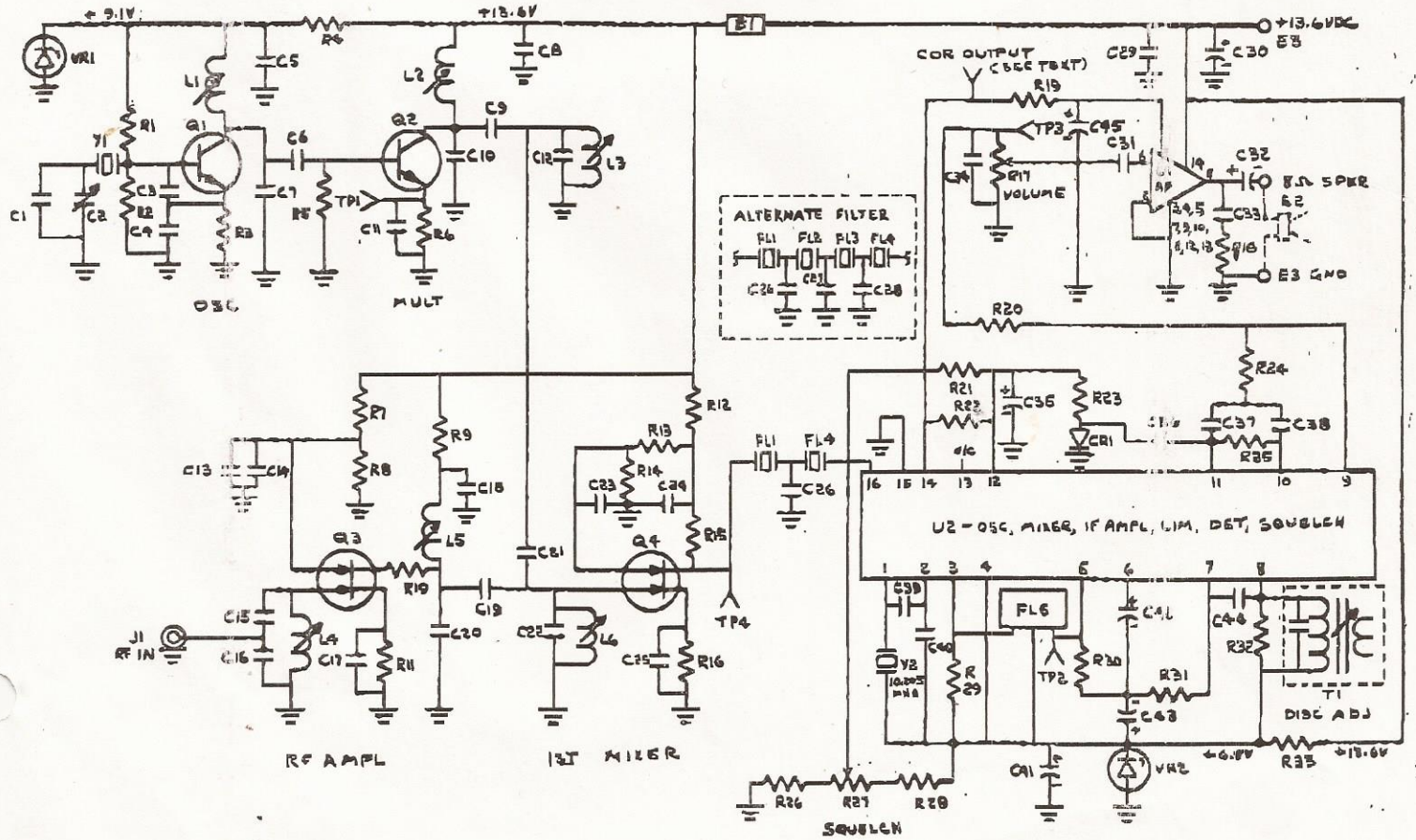
+9.1V
+13.6V
E1
+13.6VDC
E3
COR OUTPUT
(SEE TEXT)
VOLUME
8Ω SPKR
E3 GND
ALTERNATE FILTER
OSC
MULT
RF AMPL
1ST MIXER
J1
RF IN
U2 - OSC, MIXER, IF AMPL, LIM, DET, SQUELCH
FL6
T1
DISC ADJ
SQUELCH
+6.8V
+13.6V