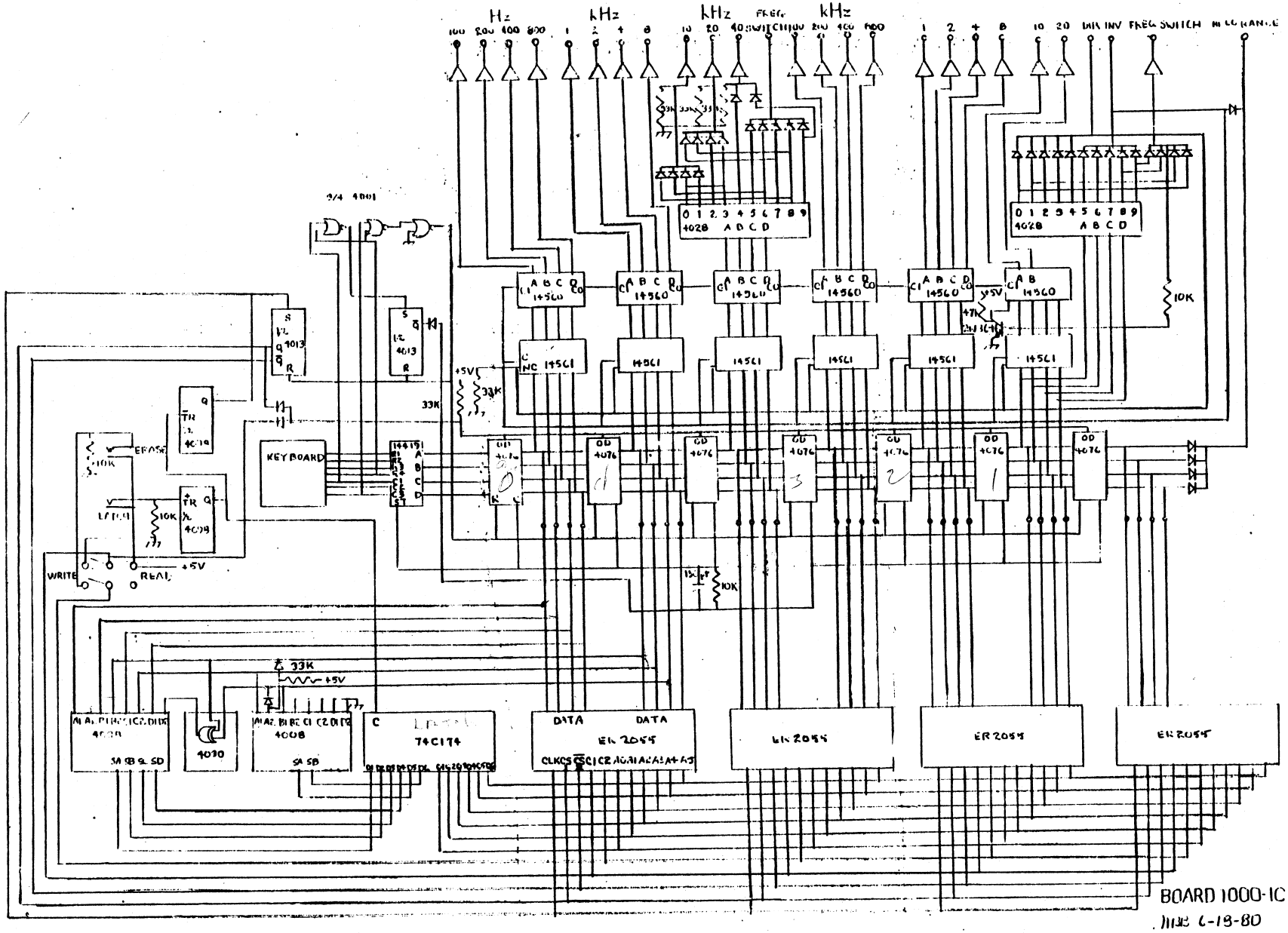

BOARD 1000-IC
JMB 6-18-80